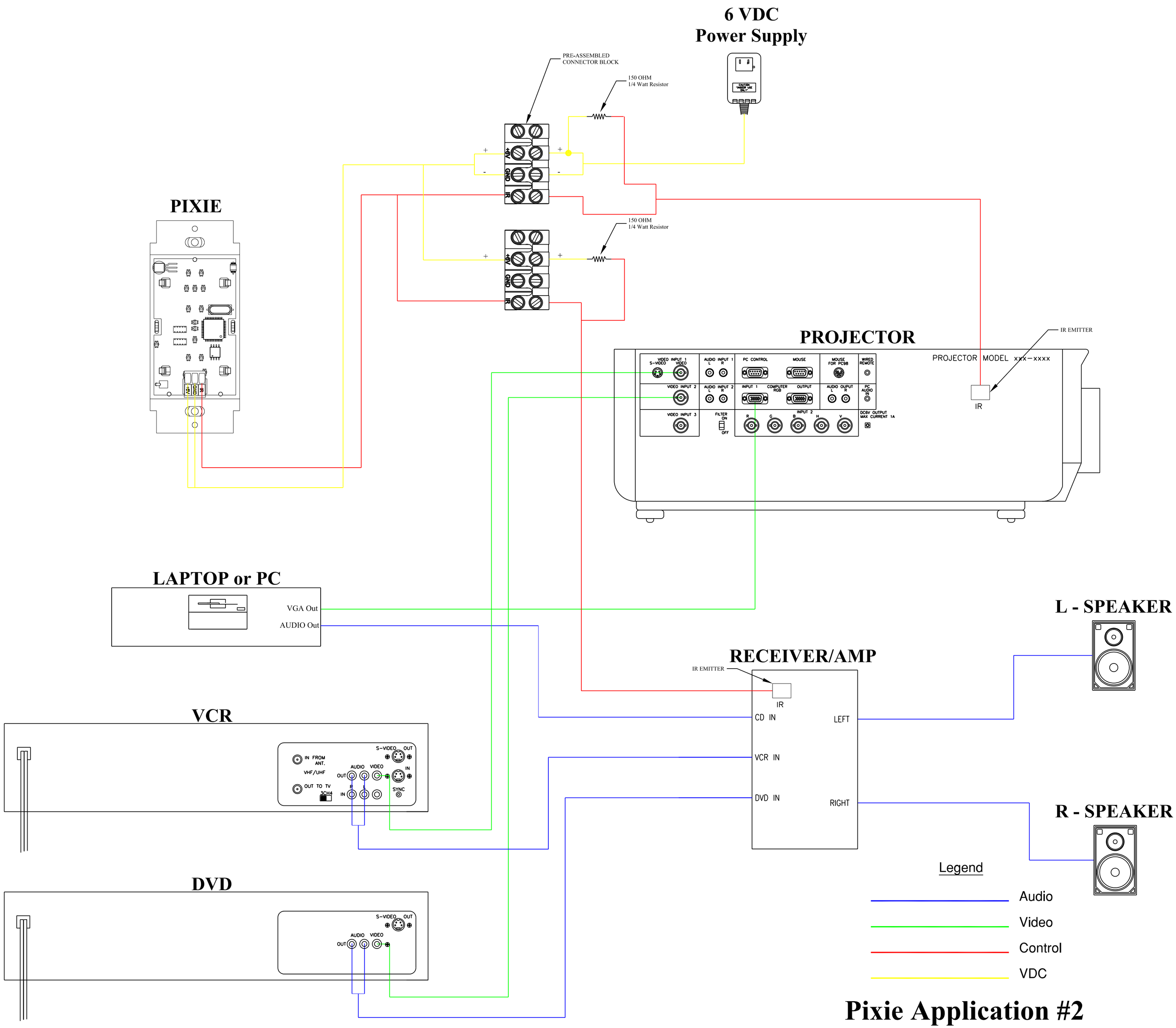

Pixie Application #2